Linear-Q™ Generation 2

LL4LQ2 Series Zone Control LED Battens

SEVEN YEAR 7 WARRANTY

Linear-Q Features at a Glance

- Range: 1470Lm, 11W
- Up to 141Lm/W
- Integrated Lumex SmartSense Zone Control technology
- LM80 projected LED life > 50,000 hours
- Colour Temperatures: 6500K and 4000K
- Frosted diffuser, Beam angle 120°
- Colour rendering CRI > 80
- Fixture colour: White
- Quick-mount clip together assembly
- End to end mounting
- Corrosion resistant extruded aluminium body
- IP40 Protection rating
- 1-10V dimming capability as standard
- Immune to Ripple Frequency Interference
- Direct connect facility
- Fully recyclable
- Fully Australian Approved
- Seven Year Warranty

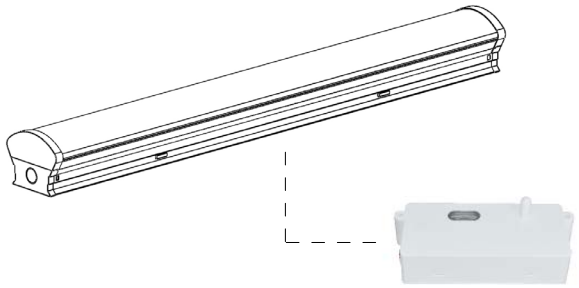

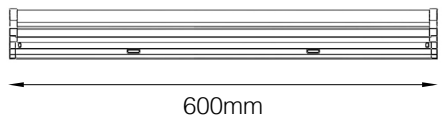

Dimming

Linear-Q SmartSense Zone Control Battens have an integrated Lumex SmartSense Zone Control technology. Fixtures operate autonomously to monitor occupancy in their immediate area using highly effective microwave technology.

Ripple Frequency Interference

Linear-Q SmartSense Zone Control products are immune to ripple frequencey interference.

Unrivalled Efficiency

Linear-Q SmartSense Zone Control products utilise the latest developments in LED and offer among the highest energy to light conversions currently available - up to 141Lm/W.

Environment and Safety

Linear-Q SmartSense Zone Control products are fully recyclable with no glass to break, no dangerous chemicals, and no risk from exposed voltages.

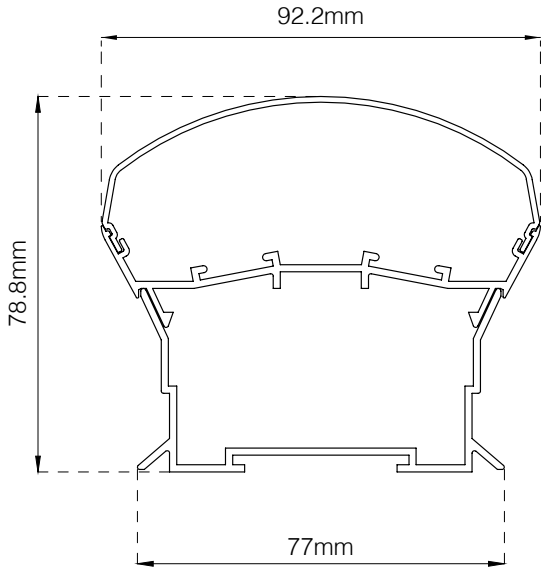

Catalogue Number Guide: Linear-Q SmartSense Zone Control

Example: Linear-Q SmartSense Zone Control, 600mm, Output Level 1, 120° Beam Angle, 6500K, White Fixture **LL4LQ2M61C6W**

Product Group		Group Designation		Dimmable		Size		Level		Colour Temperature		Fixture Colour	
Fixtures	LL4	Linear Q Zone Control	LQ2M	1-10V Dimmable		600mm	6	Single	1	6500K	C6	White	W
				DALI	DD					4000K	N		

RIPPLE FREE | 120° | IK05 | A+ | CRI>80 | IP40 | N 5522

LUMEX LED LIGHTING

LUMEX CUSTOMER SERVICE

1300 897 287

www.lumexlighting.com.au

100% Australian

Linear-Q™ Generation 2

LL4LQ2 Series Zone Control LED Battens

SEVEN YEAR 7 WARRANTY

Physical

Length:	600mm
Width:	92.2mm
Height:	78.8mm
Weight:	0.88kg

Control and Programming

Dimming:	1-10V

Construction

Colour:	White
Body:	Aluminium
Impact Rating:	IK05
Protection Rating:	IP40

Connection

Power Connection:	Direct connection

Output

Luminous Flux 4000K:	1470Lm
Efficacy:	up to 141Lm/W
Beam Angle:	120°
CRI:	>80

Electrical

Input Voltage:	220-240 Vac
Typical Total Power:	11W
Power Factor:	0.90

Thermal

Storage Temperature:	-20°C to +70°C
Operating Range Ta:	-10°C to +45°C
Humidity (non-condensing):	20-95%

Certificates

EMC:	AS/NZS CISPR15 (C-Tick)
Electrical Safety:	AS/NZS 60598.2.1, AS/NZS 4417 (RCM)

Light Management Settings

Zone Control configuration is via a series of DIP switched or via remote control

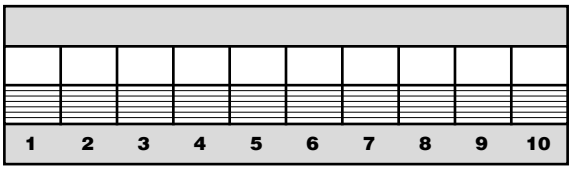

1 & 2 - Sensor Range and Sensitivity (3-10m diameter)

3 & 4 - Hold time (10sec - 60min)

5 & 6 - Light Level Activation threshold (10 - 50 lux)

7 & 8 - Minimum Dim Level (50% to off)

9 & 10 - Dim to Off time (1min - 60min)

For further details refer to SmartSense Zone Control Manual

Zone Control Specifications

Operating Voltage:	240Vac
Rated Load:	1200VA @ 240Vac
HF System:	5.8GHz
Power Consumption:	<1W (Operation)
Dim Control Output:	0-10V, max, 25mA sinking current
Detection radius/angle:	8m/360°
Mounting Height:	2.3m to 6m
Romote Range:	10m indoor
Humidity:	Max. 95% RH
Transmission Power:	<0.2mW

Specifications subject to change without notice.

LUMEX LED LIGHTING

LUMEX CUSTOMER SERVICE

1300 897 287

www.lumexlighting.com.au

100% Australian